Alle Rechte vorbehalten/ *All rights reserved*

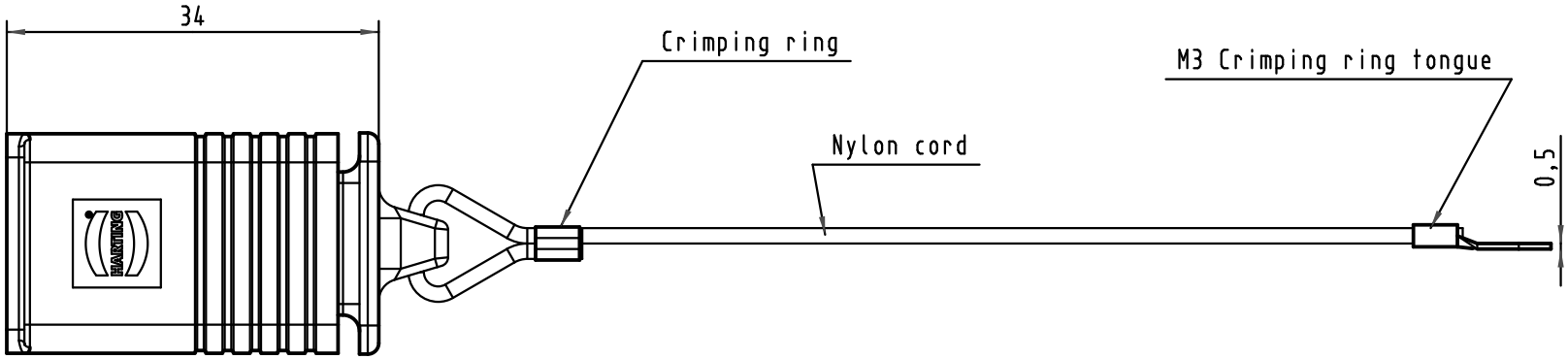

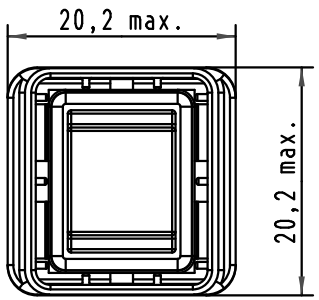

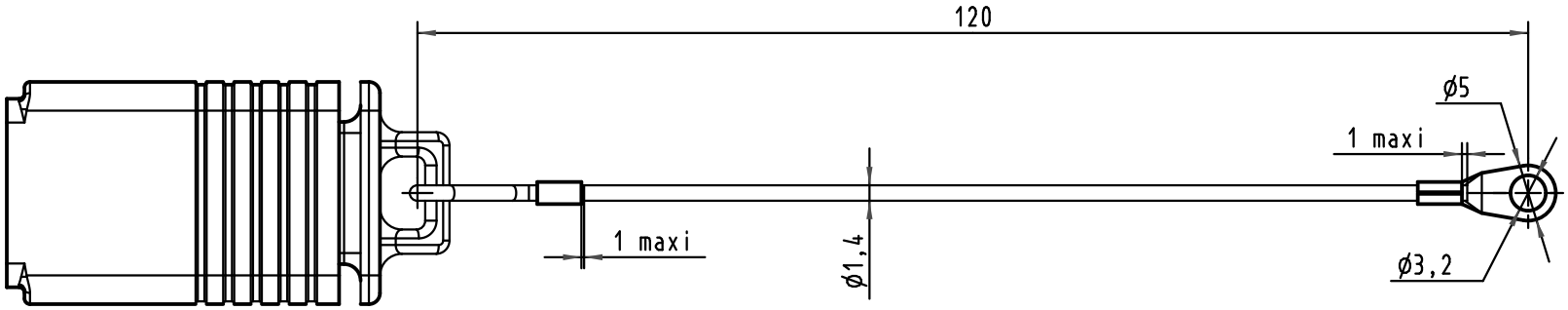

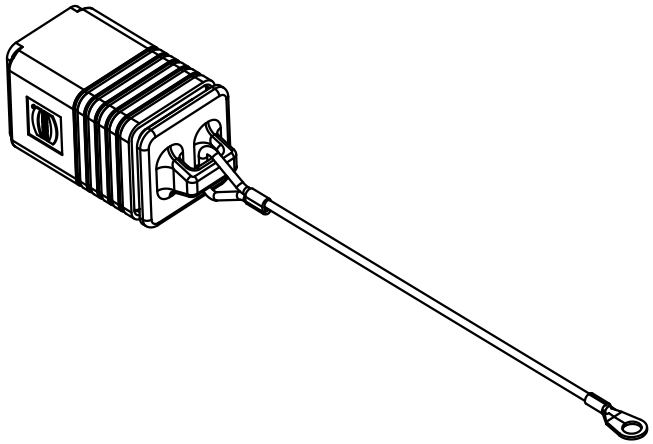

				Dat.	Name
			Detail.	15Apr2010	ED
			Insp.		
			Stand.		
36097	24Sep2010	ED			
36077	20Apr2010	ED			
Mod.	Dat.	Name			

All Dim. in mm
Orig. Size DIN A4

HARTING EURL
F-95972 Paris

RJ Industrial

Harting Push-Pull dust cap
for device side, IP67,
with fixing cord, M3 eyelet

Maßstab/ *Scale* 1.5:1

TB 09 45 845 0013

Sub.

Blatt/ *Page* 1/1